PHILIPPGROUP

Power Box System

VB3-V-002-en - 12/23 - PDF

Installation Instruction

Our products from the division
BUILDING SOLUTIONS

SERVICES

» On-site tests -> we ensure that your requirements are properly covered by our planning.

» Test reports -> for your safety and documentation.

» Trainings -> the knowledge of your employees from planning and production is enhanced by our experts on site, online or via webinar.

» Planning support -> latest design software, planning documents, CAD data and much more can be downloaded any time from www.philipp-group.de.

HIGH DEMANDS ON PRODUCT SAFETY AND PRACTICALITY

» Close cooperation with notified bodies and - if necessary - approval of our solutions.

TECHNICAL DEPARTMENT

» Our expert-team will support you at any time during your planning phase with detailed advice.

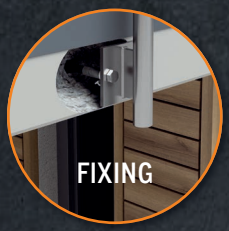

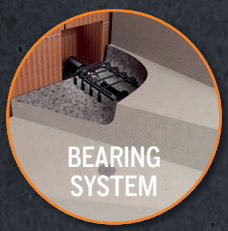

CONTENT

PRODUCT CHARACTERISTICS - OVERVIEW

	Approved (German approval)			
	Power One System	Power Duo System	Power OS rail	Power Box System
	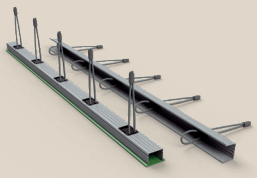	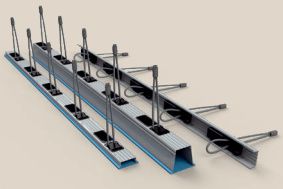	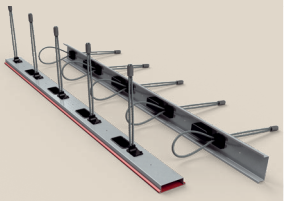	
LOAD DIRECTIONS / MAX. DESIGN RESISTANCES				
	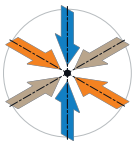	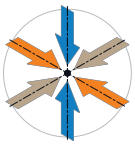	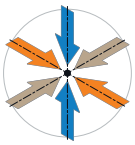	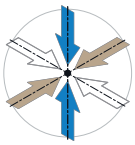
$v_{Rd,II}$ (kN/m)	60.0	90.0	80.0	105.0
$v_{Rd,\perp}$ (kN/m)	37.5	37.5	35.7	28.6
Z_{Rd} (kN/loop)	10.0	10.0	10.0	-
AREA OF APPLICATION (RECOMMENDED)				
Precast building	✓	✓	✓	✓
In-situ concrete constructions	-	-	✓	-
Wall / wall	✓	✓	✓	✓
Wall / wall (T-connection)	-	✓	✓	✓
Wall / column	-	✓	✓	-
Minimum wall thickness (cm)	10	12 / 14 ①	14	14
Concrete strength precast unit	C30/37	C25/30 ② / C30/37	C25/30	C30/37
TECHNICAL INFORMATION				
Technical basis	National technical approval (abZ)	National technical approval (abZ)	National technical approval (abZ)	National technical approval (abZ)
Max. fire resistance	F 180	Firewall (REI 90-M) and also F 180	F 180	F 180
Mortar grouting	Grouting mortar	Thixo- or grouting mortar	Normal weight concrete	Grouting mortar
Manufacturer of mortar	BETEC	BETEC / P&T	-	P&T

① with P&T / ② with BETEC

Constructive	
Connecting rails	Connecting loop
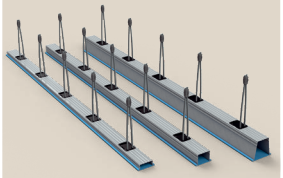	
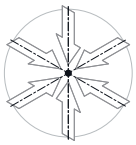	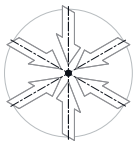
-	-
-	-
-	-
✓	✓
✓	✓
✓	✓
✓	✓
✓	✓
-	-
-	-
-	-
F 180	F 180
Mortar or normal weight concrete	Mortar or normal weight concrete
-	-

Accessories

for Connecting rails and loop systems

Magnetic fastener

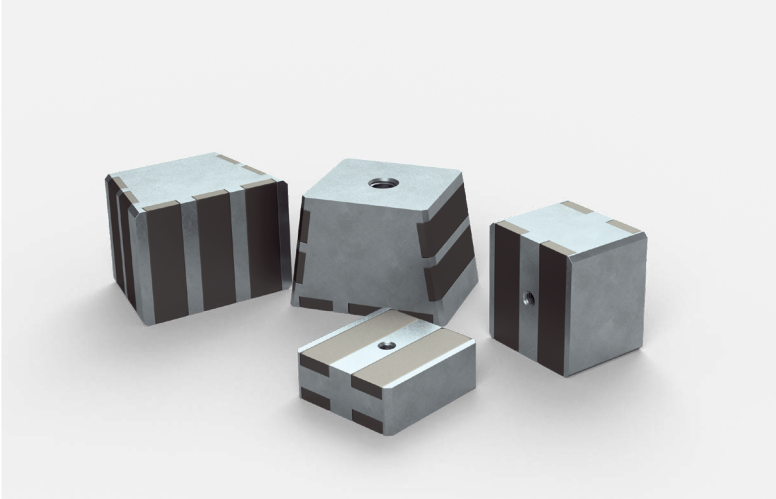

Mortar

- BETEC Grouting
- BETEC Thixo

- EuroGrout Varix
- EuroGrout Universalfüller

- EuroGrout 04

THE APPROVED POWER BOX

YOUR BENEFITS AT A GLANCE:

- » Connection with flexible wire rope loops, no complicated “rebend” required
- » High capacities for shear forces right-angled and parallel to the joint
- » Simple design via webbased software
- » Optimal utilization because of variable number of Power Box per joint
- » Box cover recyclable, weatherproof and suitable for hot bonding
- » Tested and certified system (box and mortar) with German approval

Our design software you will find at
www.philipp-group.de

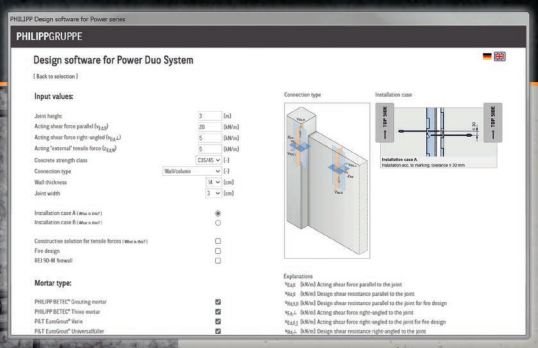

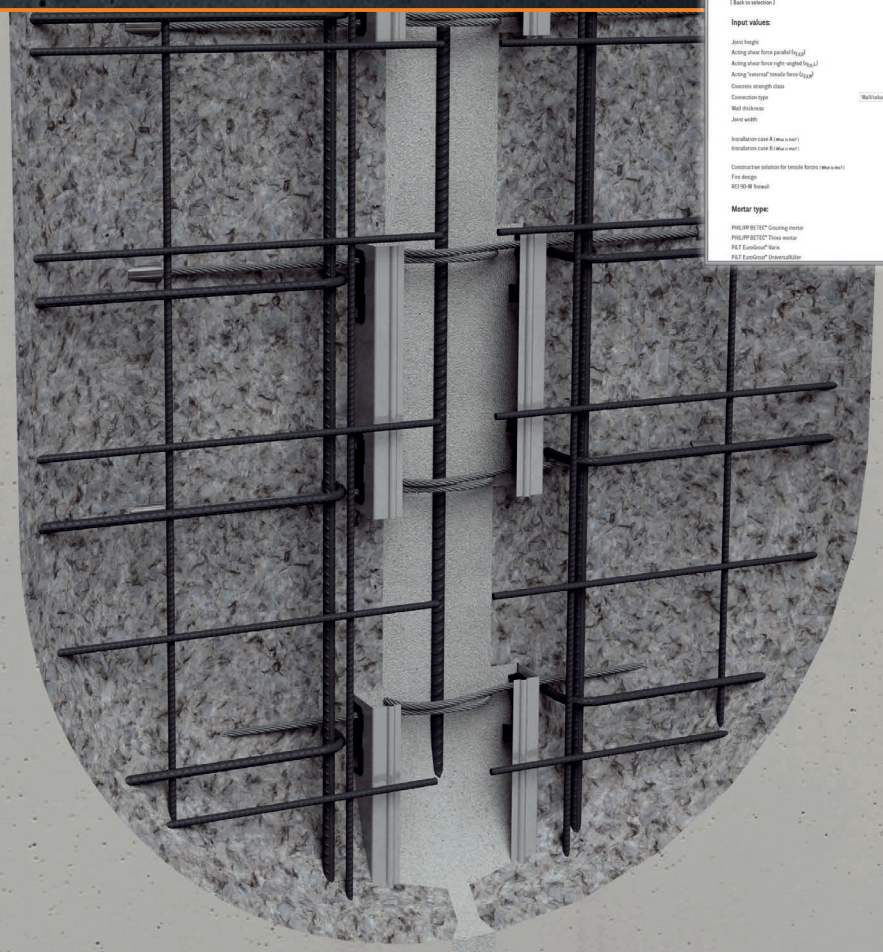

SYSTEM COMPONENTS

SYSTEM COMPONENTS AND DIMENSIONS

The Power Box System is used for the connection of precast concrete units where high static forces have to be transferred and proofed. It is able to transfer shear forces parallel and right-angled to the wall safely into the concrete unit (see page 3). A simple installation and the joint geometry pre-defined by a timber board guarantee an easy installation.

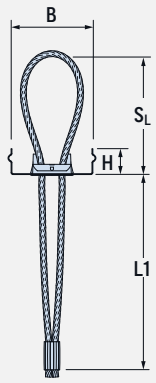

Picture 1

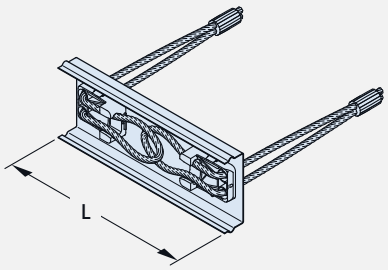

Picture 2

Picture 3

THE POWER BOX SYSTEM IS OPTIMALLY HARMONISED AND CONSISTS OF:

» the galvanised Power Box including a high-capacity, flexible steel wire rope and a plastic cover
» high-strength, free-flowing grouting mortar (Picture 3).

TABLE 1: DIMENSIONS OF THE POWER BOX

Ref. no.	Dimensions					PU	Weight
	S_L (mm)	B (mm)	H (mm)	L (mm)	L_1 (mm)	(pcs.)	(kg/PU)
54PB120	120	80	25	220	190	100	42.0

APPLICATION

DIMENSIONS OF CONCRETE UNIT

The reinforced concrete elements must have a minimum thickness of 14 cm. If shear forces right-angled to the joint are transferred, the joint or element length must be at least 100 cm for wall thicknesses < 18 cm. In general, a maximum joint height of 3.5 m is allowed.

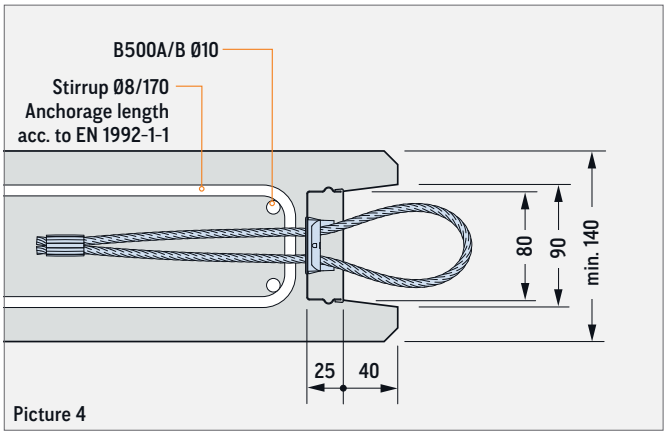

Picture 4

GROUTING IN SECTIONS

Higher joints are possible if the subsequent grouting of the joint is made step-by-step in sections of 3.5 m with a grouting hose.

RANGE OF APPLICATIONS AND EXAMPLES

The Power Box System can be used for almost all connections of reinforced precast concrete wall elements. Primarily, it transfers static shear loads parallel or right-angled to the wall.

Tensile forces in the joint (plane to the wall) have to be excluded or taken by appropriate static or constructive measures.

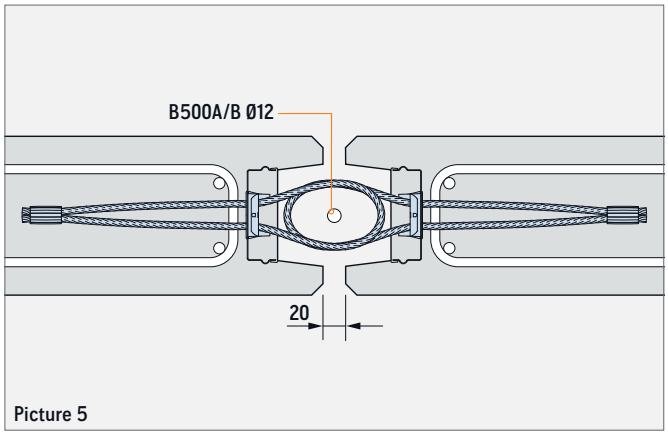

Picture 5

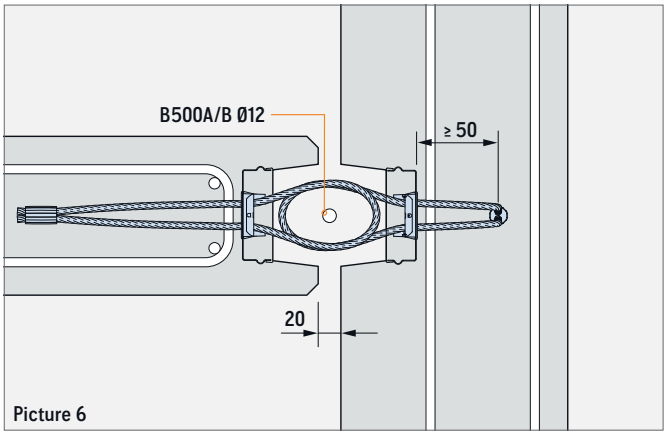

Picture 6

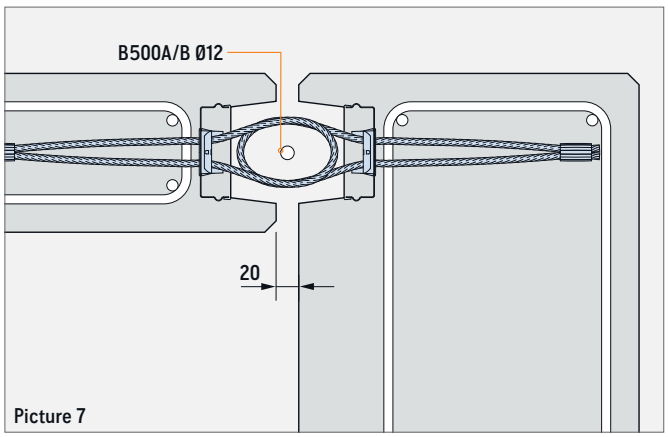

Picture 7

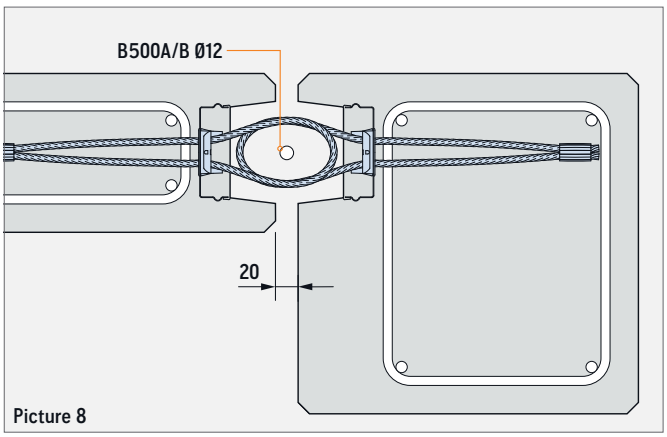

Picture 8

DESIGN AND CONSTRUCTION

The reinforced precast concrete units to be connected must correspond to EC 2. Furthermore, the precast units have to be made of normal weight concrete with a strength class of at least C30/37 according to EN 206. The structural engineer is responsible to design the elements and to prove the joint connection according to the German national technical approval (Z-21.8-1840).
In the following table values for the design shear resistance parallel to the wall ($V_{Rd,II}$) as well as right-angled to the wall ($v_{Rd,\perp}$) are shown:

If there are shear forces right-angled to the joint, a tensile force must be considered, which is one and a half times of the transferred shear force. This tensile force can be transferred via appropriate reinforcement, e.g. arranged as a ring beam, or other constructive measures (e.g. fixed column, friction forces).
If both shear forces occur an interaction is necessary, then the shear force right-angled to the joint ($v_{Rd,\perp}$) can only be considered partly. For this $v_{Rd,\perp}$ must be multiplied with a design factor. Diagram 1 shows the interaction between the shear forces parallel and right-angled to the joint.

TABLE 2: DESIGN SHEAR RESISTANCE PARALLEL AND RIGHT-ANGLED TO THE JOINT (WALL LEVEL)

Wall thickness h	Design shear resistance							
	C30/37		C35/45		C40/50		C45/55	
(cm)	$V_{Rd,II}$ (kN/Box)	$v_{Rd,\perp}$ (kN/m)	$V_{Rd,II}$ (kN/Box)	$v_{Rd,\perp}$ (kN/m)	$V_{Rd,II}$ (kN/Box)	$v_{Rd,\perp}$ (kN/m)	$V_{Rd,II}$ (kN/Box)	$v_{Rd,\perp}$ (kN/m)
14 ①	40.0	6.2	40.0	7.1	40.0	7.6	40.0	8.1
16 ①		8.9		10.1		10.9		11.6
18		11.9		13.5		14.5		15.4
20		15.0		17.1		18.4		19.6
22		18.4		21.0		22.5		24.0
24		22.0		25.0		26.9		28.6

Design shear resistance $v_{Rd,\perp}$ for wall thicknesses < 18 cm only possible if joint or element length > 100 cm.

The percentage of the shear force right-angled to the joint is given in diagram 1 or calculated as follows:

With **$V_{Ed,II}$ ≤ 13 kN/Box it is possible to take $v_{Rd,\perp}$ given in table 2 with 100 %** for the design!

With **$V_{Ed,II}$ > 13 kN/Box $V_{Rd,\perp}$** must be multiplied with the following reduction factor.

Reduction factor = 1/3 + 0.025 × (40 – $V_{Ed,II}$)
$v_{Rd,\perp}$ = reduction factor × tabular value

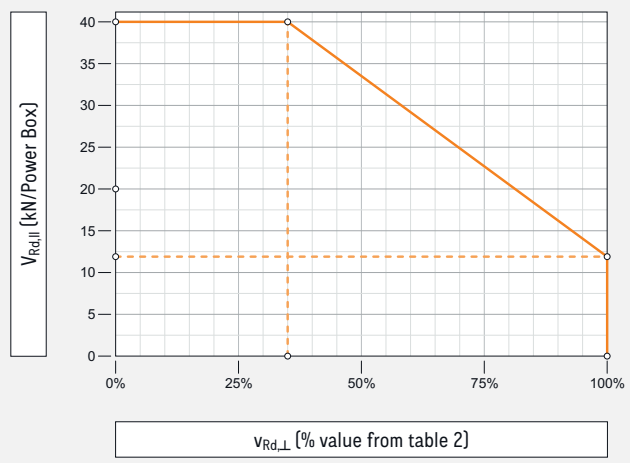

Diagram 1: Interaction of shear forces right-angled and parallel to the joint

FIRE PROTECTION

In addition to the actual approval the joint construction is also certified for the **fire protection class F180** (with a minimum wall thickness of 15 cm) on the basis of EC 2 and EC 3.

A construction with the Power Box does not transfer fire or smoke before the 180th minute. Also inadmissible temperature increases above the initial temperature at the beginning do not occur so that the structural stability is guaranteed.

REINFORCEMENT

By means of a timber board the Power Box is installed. The minimum distance between the Power Boxes of 120 mm and to the edge of 150 mm must not be exceeded (picture 9). In the range of the Power Boxes the precast elements must be provided with a minimum reinforcement. This reinforcement shall be stirrups Ø8 for each wire loop and longitudinal reinforcement 2 Ø10 (picture 9, alternatively picture 10).

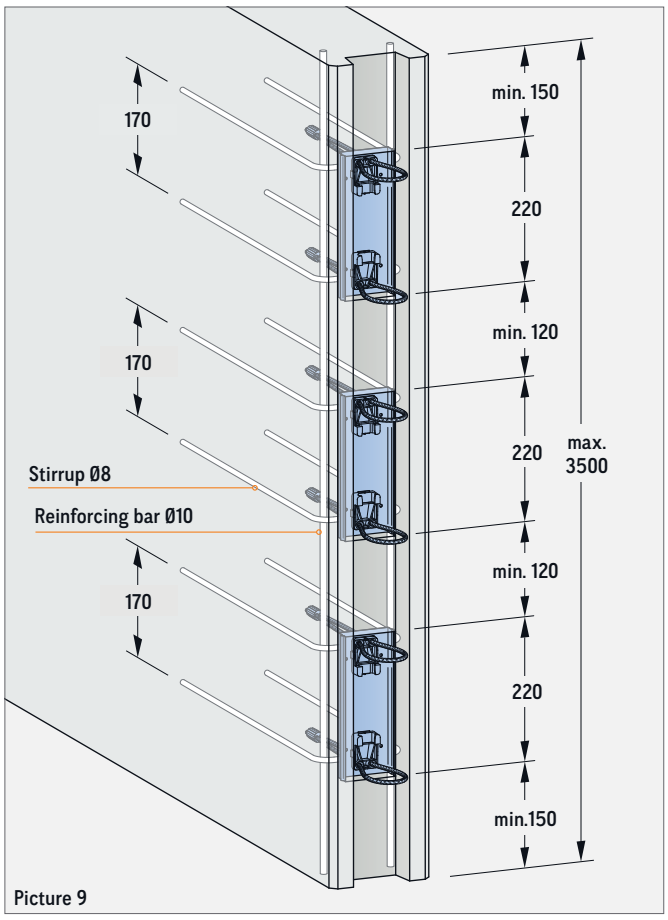

Picture 9

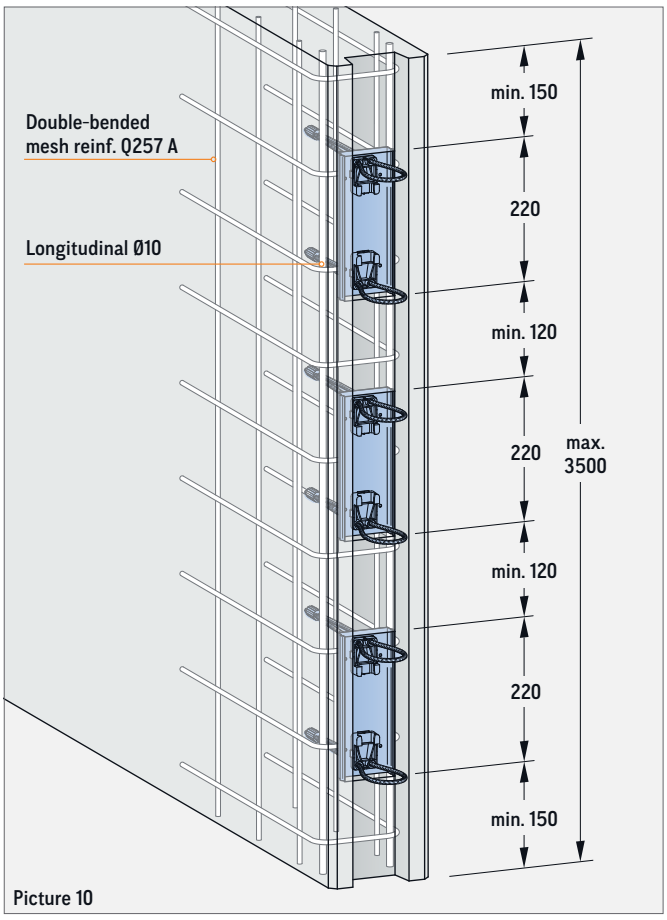

Picture 10

ALTERNATIVE MESH REINFORCEMENT

Alternatively, the stirrups can be replaced by a comparable mesh reinforcement (picture 10).

This requirement is fulfilled e.g. by a mesh reinforcement type Q257 A (equivalent ≠2.57 cm²/m).

The end anchorage of the connecting loops must be aligned right-angled to the Power Box in the precast element. For a vertical installation in the formwork the alignment of the wire loops in the precast unit should be ensured by tying those to the reinforcement.

END ANCHORAGE OF THE WIRE ROPE

A bending of the end anchorage by the reinforcement is not permissible.

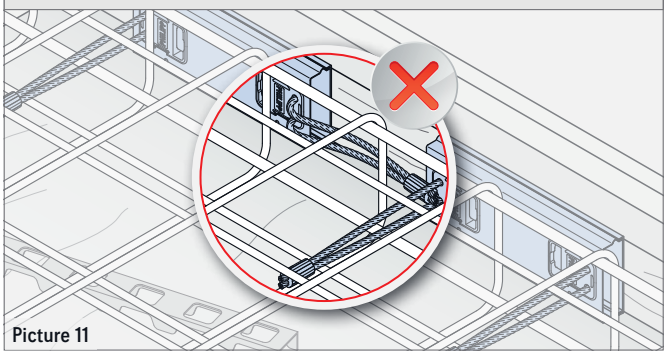
Picture 11

ADDITIONAL REINFORCEMENT (ONLY FOR BENT LOOPS)

BENDING OF THE END ANCHORAGE

If the anchorage of the wire rope loop is bent, attention must be paid that the horizontal anchorage part is ≥ 50 mm (picture 12 and 13). Depending on the installation situation, additional reinforcement shall be provided as shown in according to picture 12 or 13.

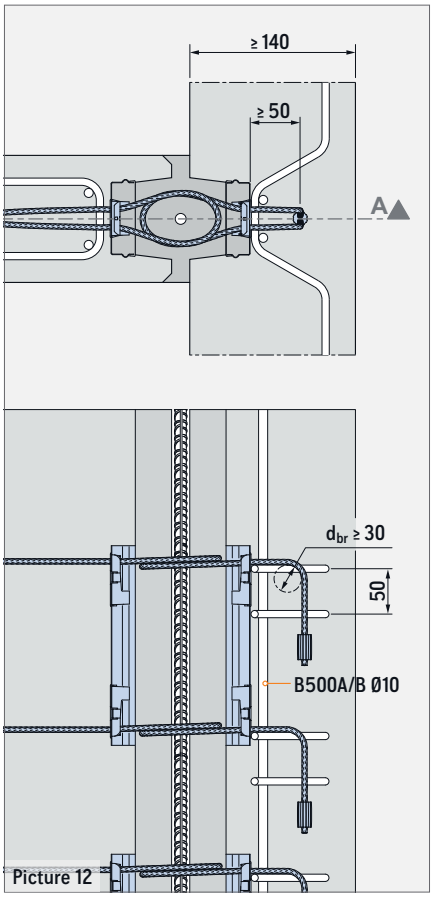

Picture 12

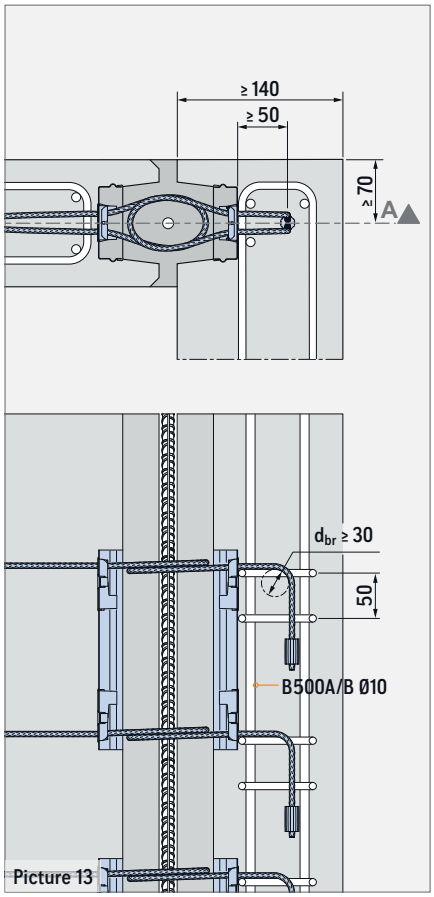

Picture 13

TABLE 3: REINFORCEMENT (B500A/B)

$Ød_s$ (mm)	L (mm)	l (mm)	$Ød_{br}$ (mm)
Ø8	1000	70	Ø32

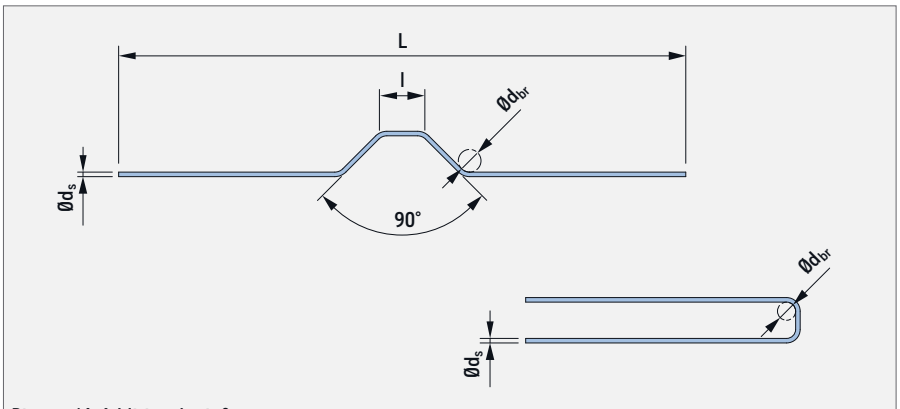

Picture 14 Additional reinforcement

DESIGN EXAMPLE

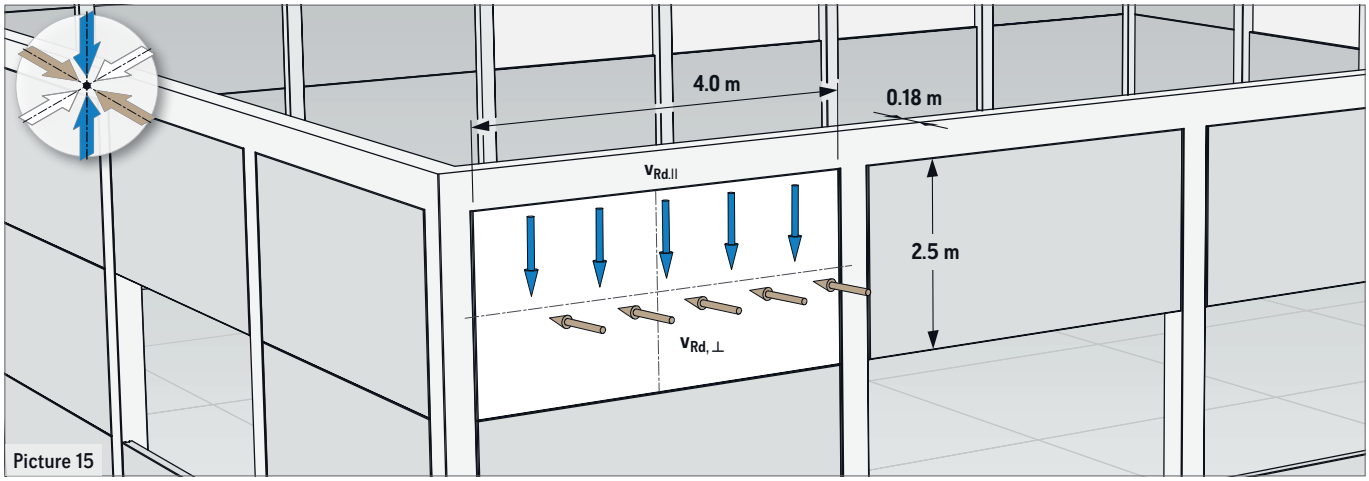

Picture 15

EXAMPLE WALL SUPPORT

In this example the support reactions of a panel are transferred via the Power Box System. Not only the dead weight of the panel but also the weight of the beam and the ceiling boards as well as variable loads are taken into consideration.

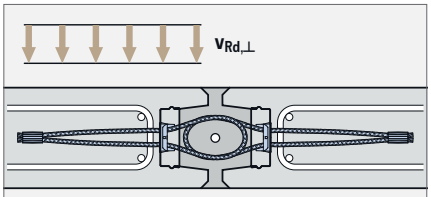

Picture 15a

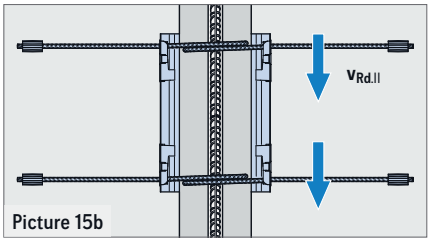

Picture 15b

ACTIONS TO THE JOINT:

- Weight of the panel 2.5 m × 4.0 m × 0.18 m × 25 kN/m^3 = 45 kN
- Weight of ceiling boards and beam: 120 kN
- Significant variable force: 30 kN
- Building height ≤ 10 m, wind zone 1, inner land, according to EC 1

HEREWITH THE FINAL DESIGN VALUE IS CALCULATED (SHEAR FORCE PARALLEL TO THE JOINT):

$V_{Ed,II}$ = (1.35 × (45 kN + 120 kN) + 1.5 × 30 kN) / 2 = 133.9 kN for each joint
$v_{Ed,II}$ = 133.9 kN / 2.5 m = 53.6 kN/m for each joint

SHEAR FORCE RIGHT-ANGLED TO THE JOINT CAUSED BY WIND:

$V_{Ed,\perp}$ = 1.5 × (0.8 kN/m^2 × 0.5 × 2.5 m × 4.0 m) / 2 = 3 kN/m for each joint

Chosen concrete strength: C30/37
Chosen number Power Box pairs: n = 4

AS A RESULT THE RESISTANCE FORCES (RIGHT-ANGLED AND PARALLEL) ARE:

Shear force parallel: $v_{Rd,II}$ = 40 kN × 4 boxes / 2.5 m = 64 kN/m (forces for each box: $V_{Ed,II}$ / 4 = 133.9 kN / 4 = 33.5 kN/Box)
Shear force right-angled: $v_{Rd,\perp}$ = 11.9 kN/m (value from table 2)

If both forces occur at the same time an interaction (diagram 1) must be considered:

Reduction factor = 1/3 + 0.025 × (40 kN – 33.5 kN) = 0.50

THE REDUCED SHEAR FORCE RIGHT-ANGLED TO THE JOINT CAN BE SET TO 50 %

red. $v_{Rd,\perp}$ = 0.50 × 11.9 kN/m = 5.95 kN/m ≥ 3.0 kN/m = $v_{Ed,\perp}$

This calculation shows that not only the dead weight of the panel but also high forces of beam constructions and wind loads can be transferred by the Power Box system at the same time.

INSTALLATION

PRODUCTION OF PRECAST CONCRETE ELEMENTS

The Power Box System works on the principle of a lapped joint. Therefore, it is necessary that the opposite connecting loops are arranged on the same height (picture 22).
A fixation of the Power Box System is possible by nailing as well as hot bonding to the formwork (picture 13 and 14).

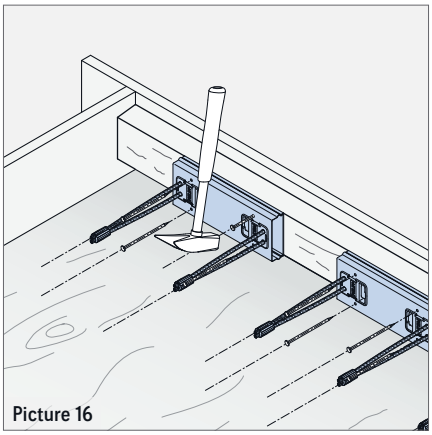
Picture 16

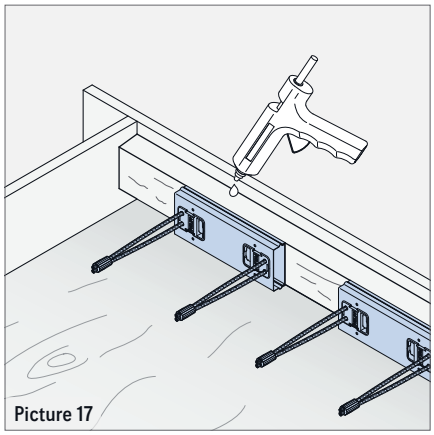
Picture 17

MOUNTING

PREPARATION FOR MOUNTING

Before grouting the cover of the box has to be removed (picture 18).
Then, the connecting loops are expanded perpendicularly to the Power Box (picture 19).

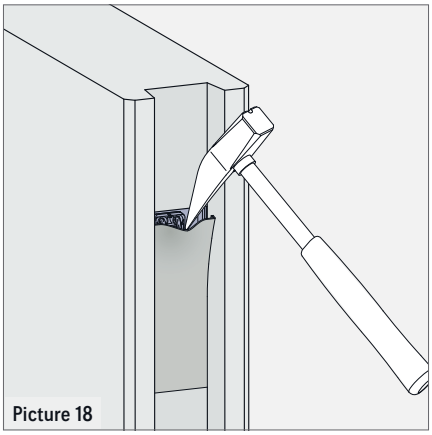
Picture 18

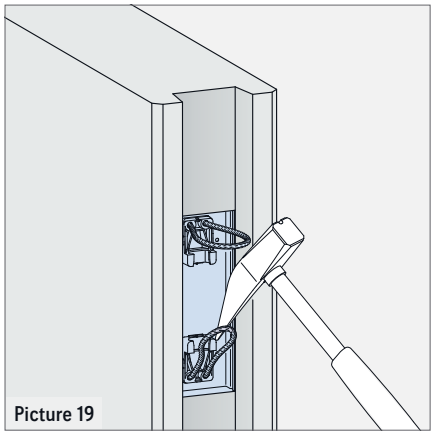
Picture 19

MOUNTING AND GROUTING

If the Power Boxes are installed correctly the loops overlap horizontally with nominal 90 mm as shown in picture 20.

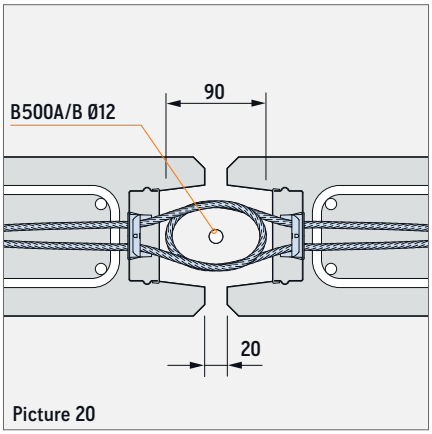

Picture 20

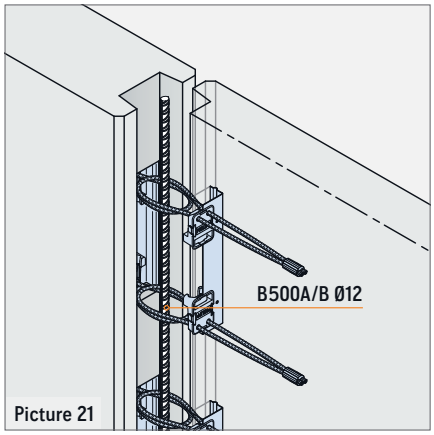

Picture 21

Ideally, in vertical direction there is no distance between the loops from both sides (picture 22).
Nevertheless, the approval for the Power Box System already considers horizontal and vertical tolerances. The maximum tolerances for all cases are shown in picture 23 to 25.
Prior sealing the joint a reinforcing bar Ø12 mm shall be positioned along the entire length of the joint through the overlapping loops. Make sure when using an expanding waterstop tape that it does not affect the grouting cross section or reduces the required concrete cover for the Power Box System.
The appropriate installation should be inspected visually. After this the joint is sealed on both sides and filled with grouting mortar. Here, the use of a grouting hose with a hopper eases the process considerably. It is recommended to fill the joint in sections
The grouting mortar should be mixed, filled in and compacted according to the processing instructions given on page 14.

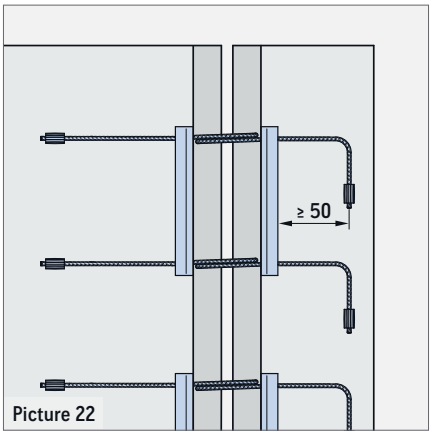

Picture 22

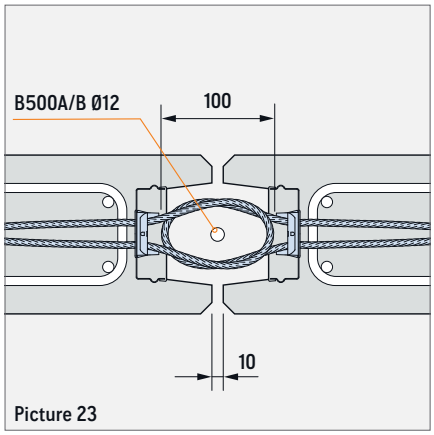

Picture 23

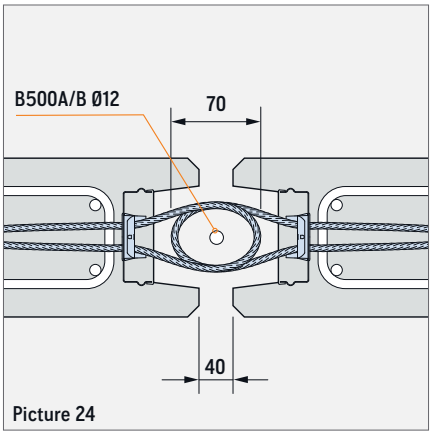

Picture 24

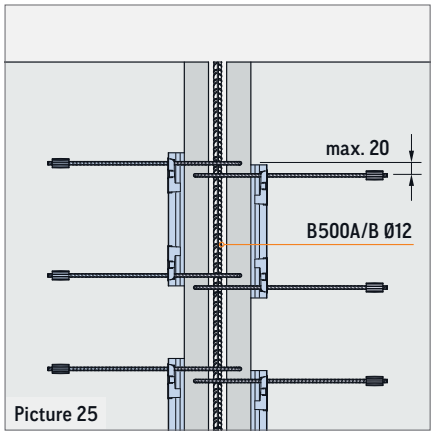

Picture 25

PHILIPP GROUTING MORTAR VG

GROUTING WITH PHILIPP GROUTING MORTAR VG

The grouting mortar VG is a joint mortar for the approved Power Box System. It is a ready-to-use dry mixture on a cement base for grouting of precast concrete units. Furthermore, it is shrinkage-free, has a high early and final strength and good flow ability.

PRE-TREATMENT

The surface must be clean of oils, greases etc. and cement slurry at the surface shall be removed. Each time a seal formwork should be used. In order to improve the adhesion the joint surface shall be pre-wetted thoroughly.

PROPERTIES

The grouting mortar VG is free of chlorides. It has a good adhesion to steel and concrete and shows no signs of segregation. Furthermore, it has a good pumpability and resistance to frost and de-icing salt. The Grouting mortar VG is produced always in consistently high quality and is easy to process. Due to its flowable consistency the mortar is self-levelling and fills out all accessible venting hollow spaces.

MIXING AND GROUTING

Approximately 2/3 of the mixing water is put into the mixer first, then the Grouting mortar VG is stirred in completely. Afterwards the remaining water is used to adjust the consistency. The mixing time is 4 - 6 minutes depending on the type of mixing. Finally, the joint is sealed at both sides before it is filled with grouting mortar. Here, the use of a grouting hose with a hopper eases the process considerably. To reduce the concreting pressure it is recommended to fill in the grouting mortar in sections. (Make sure when using an expanding waterstop tape that it does not affect the grouting cross section or reduces the required concrete cover for the Power Box System).

PROCESSING TEMPERATURE

EN 206 must be taken into consideration when working with the Grouting mortar VG. This standard set a processing temperature to a minimum of +5 °C.

POST-TREATMENT

It should be prevented that the Grouting mortar VG dries up too fast for at least three days after grouting. Appropriate measures are covering with plastic sheets, application of wet tissues or watering.

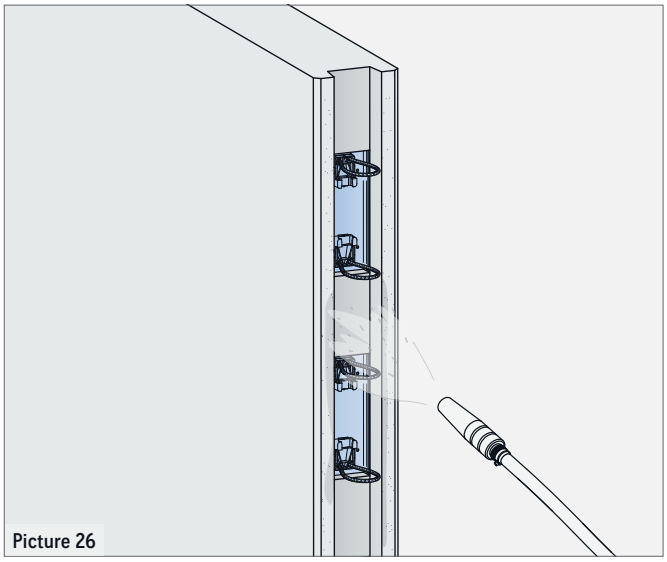

Picture 26

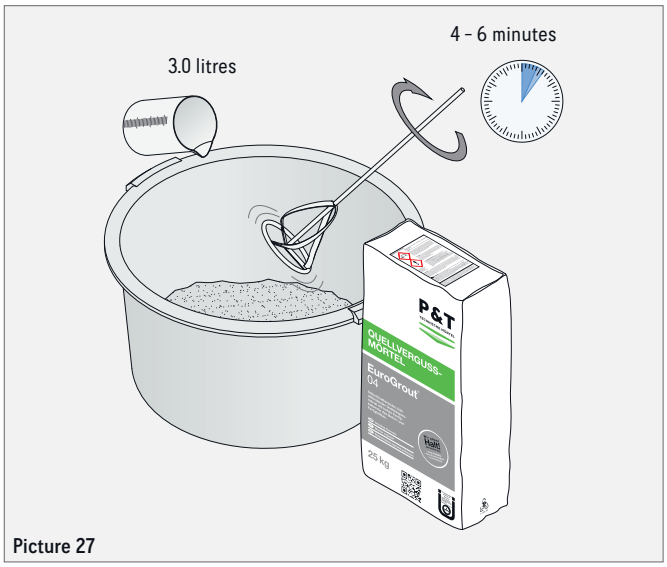

Picture 27

GROUTING & PROCESSING TIME

During grouting, make sure that air can disappear. A careful vibrating can avoid trapped air. The processing time is approximately 60 minutes at 20 °C.

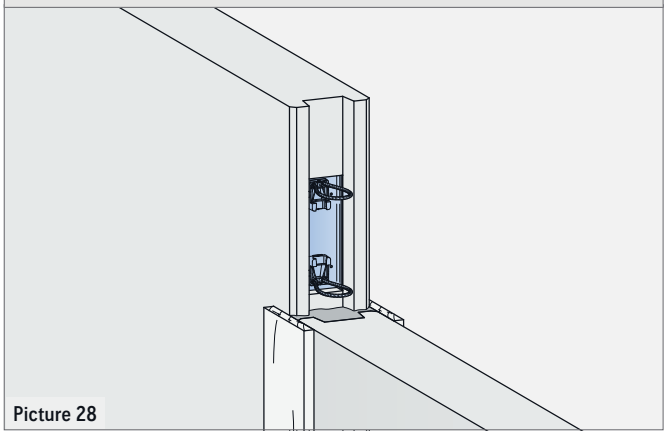

Picture 28

SOFTWARE / CAD

DESIGN

In order to design connections with the PHILIPP Power Box System you can find an online design tool on our website (www.philipp-software.de), easy-to-use and understandable.

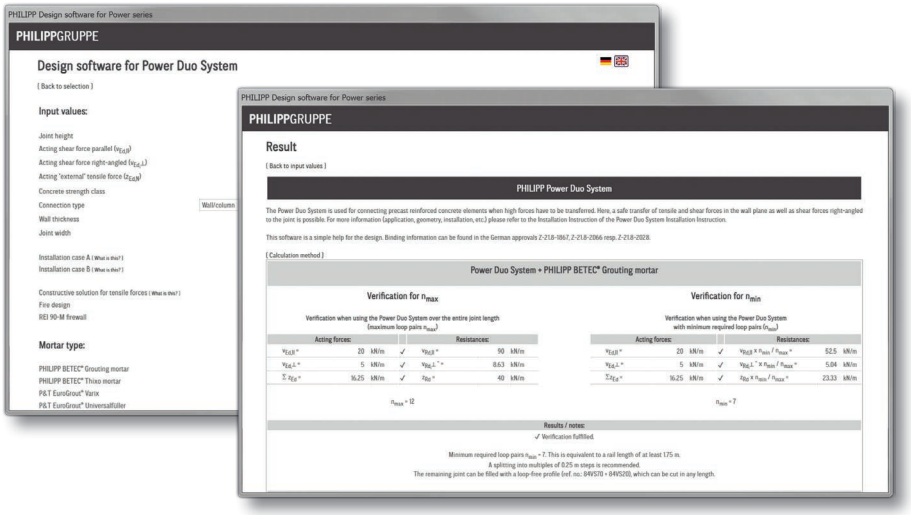

3-D MOUNTING PARTS

Time-saving during the planning process and support for the Building Information Modelling (BIM) method are becoming more and more important. This is the reason why the universal PHILIPP CAD library helps to work efficiently on these matters.

- » More than 1,200 PHILIPP products are available as 3-D model
- » Universal CAD library with many export formats compatible for all CAD systems (e. g. IFC, DWG)
- » Free offer for all people involved in precast building
- » Time-saving in the design process because of ready-made models and views
- » Simply structured catalogue
- » More product details are provided
- » Standard PartCommunity:
  philipp.partcommunity.com
- » BIM specific PartCommunity:
  3Dfindit

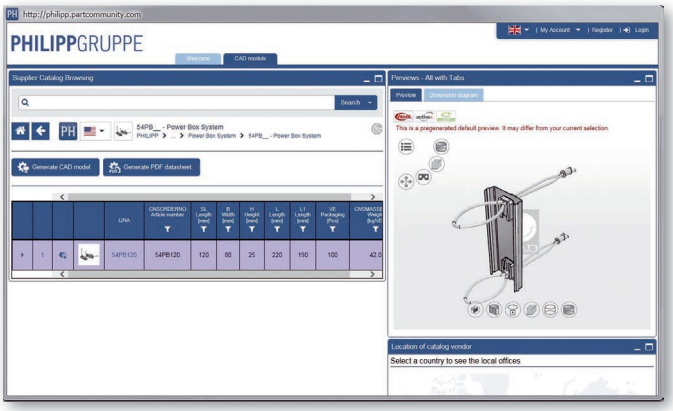

GENERAL NOTES

TABLE 4: SITE CHECK LIST

Step	What	Comment	
1	Open box	Remove cover	✓
2	Inspection of the box	Pay attention to clean surfaces, if necessary clean again	✓
3	Fold-out the connecting loops	Pay attention to the 90° position of the loops	✓
4	Align concrete units	Pay attention to admissible tolerances	✓
5	Install joint reinforcement	Along the entire length of the joint	✓
6	Pre-wetting of grouting joints	Improvement of adhesion	✓
7	Seal both sides of the joint	Use formwork, timber boards or expanding waterstop tape	✓
8	Joint grouting	Pay attention to the instructions regarding ambient temperature, compacting, processing time, etc.	✓
9	Demoulding	After hardening of the mortar	✓
10	Post-treatment of the joint	Protect from rapid drying	✓

TABLE 5:
MORTAR CONSUMPTION PER 1 M OF JOINT WITH 2 BOXES/M (KG/M)

Wall thick-ness (cm)	PHILIPP - P&T Grouting mortar Joint width (cm) 1.0	2.0	3.0	4.0
14	19.0	21.7	24.4	27.1
15	19.2	22.1	25.0	27.9
16	19.4	22.5	25.6	28.6
17	19.6	22.9	26.1	29.4
18	19.8	23.2	26.7	30.2
19	20.0	23.6	27.3	30.9
20	20.2	24.0	27.9	31.7
21	20.4	24.4	28.4	32.5
22	20.6	24.8	29.0	33.2
23	20.7	25.2	29.6	34.0
24	20.9	25.6	30.2	34.8
25	21.1	25.9	30.7	35.6
26	21.3	26.3	31.3	36.3
27	21.5	26.7	31.9	37.1
28	21.7	27.1	32.5	37.9
29	21.9	27.5	33.1	38.6
30	22.1	27.9	33.6	39.4

Joint width
Wall thickness
Mortar kg/m

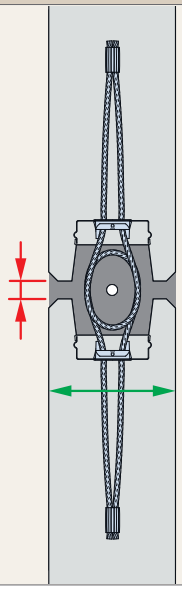

Given consumption data are only guide values.

TABLE 6:
PACKING UNIT (PHILIPP - P&T)

Mortar Type	PU (kg)	Finished volume (l)
Grouting mortar	25	13.0

P&T TECHNISCHE MÖRTEL GMBH & CO. KG

Phone: +49 2131 56 69-0
E-Mail: info@eurogrout.de
Website: https://www.eurogrout.de/de

Please consider also the German national technical approval of the Power Box System. This can be found at www.philipp-group.de or is available on request.

For further information about the mortar, please follow the link given:

EuroGrout 04

PHILIPPGROUP

HEADQUARTERS Aschaffenburg

HEADQUARTERS
Lilienthalstraße 7-9
63741 Aschaffenburg
+49 6021 40 27-0
info@philipp-gruppe.de

PRODUCTION AND LOGISTICS
Hauptstraße 204
63814 Mainaschaff
+49 6021 40 27-0
info@philipp-gruppe.de

OFFICE COSWIG
Roßlauer Straße 70
06869 Coswig / Anhalt
+49 34903 6 94-0
info@philipp-gruppe.de

OFFICE NEUSS
Sperberweg 37
41468 Neuss
+49 2131 3 59 18-0
info@philipp-gruppe.de

OFFICE TANNHEIM
Robert-Bosch-Weg 12
88459 Tannheim / Allgäu
+49 8395 8 13 35-0
info@philipp-gruppe.de

PHILIPP VERTRIEBS GMBH
Pfaffing 36
5760 Saalfelden / Salzburg
+43 6582 7 04 01
info@philipp-gruppe.at

Visit us! www.philipp-group.de

VB3-B-002-de - 12/23 - PDF • PHILIPP GmbH, 63741 Aschaffenburg • Technical changes and errors reserved